ADVANCE by signify

LED Modules

Fortimo InstantFit 44in 80L 1280mA LV1

44in 80L 1280mA LV1

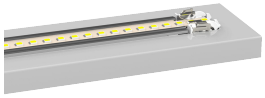

Fortimo InstantFit LV1 is the first truly field replaceable module. This revolutionary breakthrough ensures that an LED troffer containing it will never have to be scrapped on account of the light source.
Replace simply by snapping into connector on the fixture. This enables late stage fixture configuration at factory, RDC, distributor, or even in the field.
Fortimo InstantFit LV1 comes with a range of performance levels both in 2ft and 4ft options; and the rigid aluminum frame provides excellent thermal performance and ease of assembly.

Key features and benefits

- High energy efficacy of up to 170lm/W at nominal conditions
- Available in three performance levels for both 2ft and 4ft lengths
- Rigid module for easy assembly
- Excellent thermal performance
- 3 SDCM color consistency
- Field replaceable modules according to Zhaga Book 21 enabling late stage configuration and peace of mind
- Quick assembly without screws
- High energy efficacy and long lifetime
- 5-year limited system warranty with Advance Xitanium LED drivers

Ordering data

Commercial product name	12NC	Box quantity
FO IF 44in 80L 830 1280mA LV1	9290 016 77306	120
FO IF 44in 80L 835 1280mA LV1	9290 016 77406	120
FO IF 44in 80L 850 1280mA LV1	9290 016 77606	120
FO IF 44in 80L 840 1280mA LV1	9290 016 77506	120

Drive currents

Parameter	Nominal*	Life**	Max***	Unit
Fortimo InstantFit 44in 80L 1280mA LV1	1164	1280	1280	mA

Module temperatures

Parameter	Nominal*	Life**	Max***	Unit
T_c (case temperature at T_c point)	45	80	90	°C

* Nominal value at which typical performance is specified

** Value at which life time is specified

*** Maximum value for safe operation, do not operate above this value

Optical characteristics - table per color (CCT)

FO IF 44in 80L 830 1280mA LV1

Parameter	Min	Typ	Max	Unit
Luminous flux	6999	7446	7893	lm
Module efficacy	148	157		lm/W
Correlated color temperature (CCT)		3000		K
Color coordinates (CIEx, CIEy)		(0.433, 0.401)		-
Color consistency			3	SDCM
CRI	80			
Photometric code		830/359		
Radiation angle		120		deg

Measurement precision ± 5% for the flux data and ± 6% for the efficacy data. Measurement precision for color coordinates ± 0.005. Measurement precision for CRI ± 1.5

Operation point	830	lm	lm/W
50% I-nom 582mA	Tc 25 °C	3972	176
	Tc-nom 45 °C	3880	173
	Tc-max 90 °C	3634	165
I-nom 1164mA	Tc 25 °C	7648	160
	Tc-nom 45 °C	7446	157
	Tc-max 90 °C	6992	150
I-max 1280mA	Tc 25 °C	8352	158
	Tc-nom 45 °C	8156	155
	Tc-max 90 °C	7634	147

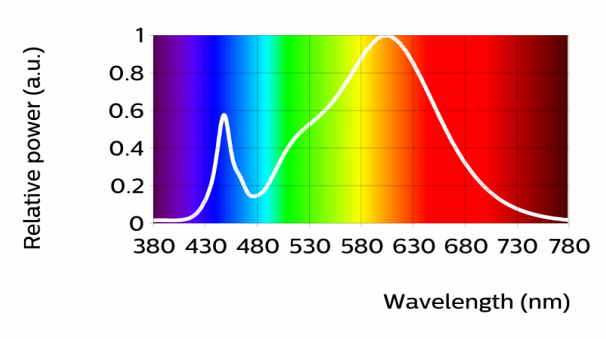

FO IF 44in 80L 835 1280mA LV1

Parameter	Min	Typ	Max	Unit
Luminous flux	7429	7903	8378	lm
Module efficacy	157	167		lm/W
Correlated color temperature (CCT)		3500		K
Color coordinates (CIEx, CIEy)		(0.406, 0.390)		-
Color consistency			3	SDCM
CRI	80			
Photometric code		835/359		
Radiation angle		120		deg

Measurement precision ± 5% for the flux data and ± 6% for the efficacy data. Measurement precision for color coordinates ± 0.005. Measurement precision for CRI ± 1.5

Operation point	835	lm	lm/W
50% I-nom 582mA	Tc 25 °C	4217	186
	Tc-nom 45 °C	4119	183
	Tc-max 90 °C	3858	175
I-nom 1164mA	Tc 25 °C	8119	170
	Tc-nom 45 °C	7903	167
	Tc-max 90 °C	7423	159
I-max 1280mA	Tc 25 °C	8866	167
	Tc-nom 45 °C	8659	165
	Tc-max 90 °C	8104	157

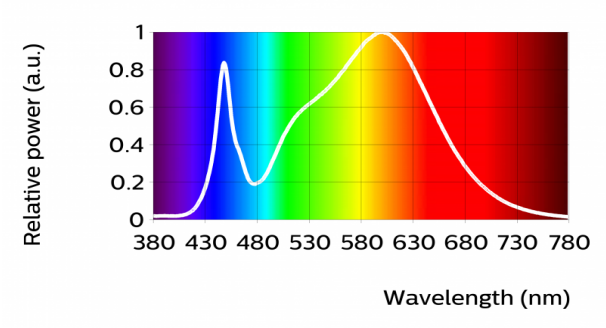

FO IF 44in 80L 850 1280mA LV1

Parameter	Min	Typ	Max	Unit
Luminous flux	7552	8034	8516	lm
Module efficacy	159	170		lm/W
Correlated color temperature (CCT)		5000		K
Color coordinates (CIEx, CIEy)		(0.341, 0.350)		-
Color consistency			3	SDCM
CRI	80			
Photometric code		850/359		
Radiation angle		120		deg

Measurement precision ± 5% for the flux data and ± 6% for the efficacy data. Measurement precision for color coordinates ± 0.005. Measurement precision for CRI ± 1.5

Operation point	850	lm	lm/W
50% I-nom 582mA	Tc 25 °C	4286	189
	Tc-nom 45 °C	4187	187
	Tc-max 90 °C	3922	178
I-nom 1164mA	Tc 25 °C	8254	173
	Tc-nom 45 °C	8034	170
	Tc-max 90 °C	7546	162
I-max 1280mA	Tc 25 °C	9013	170
	Tc-nom 45 °C	8802	167
	Tc-max 90 °C	8239	159

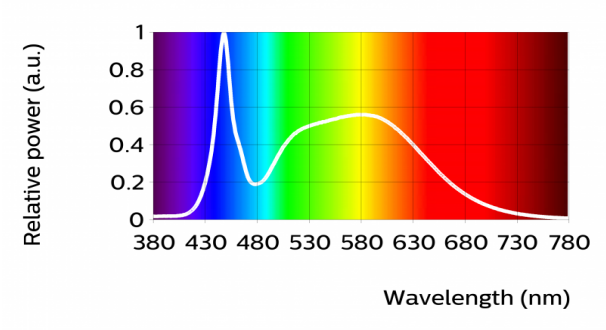

FO IF 44in 80L 840 1280mA LV1

Parameter	Min	Typ	Max	Unit
Luminous flux	7552	8034	8516	lm
Module efficacy	159	170		lm/W
Correlated color temperature (CCT)		4000		K
Color coordinates (CIEx, CIEy)		(0.381, 0.378)		-
Color consistency			3	SDCM
CRI	80			
Photometric code		840/359		
Radiation angle		120		deg

Measurement precision ± 5% for the flux data and ± 6% for the efficacy data. Measurement precision for color coordinates ± 0.005. Measurement precision for CRI ± 1.5

Operation point	840	lm	lm/W
50% I-nom 582mA	Tc 25 °C	4286	189
	Tc-nom 45 °C	4187	187
	Tc-max 90 °C	3922	178
I-nom 1164mA	Tc 25 °C	8254	173
	Tc-nom 45 °C	8034	170
	Tc-max 90 °C	7546	162
I-max 1280mA	Tc 25 °C	9013	170
	Tc-nom 45 °C	8802	167
	Tc-max 90 °C	8239	159

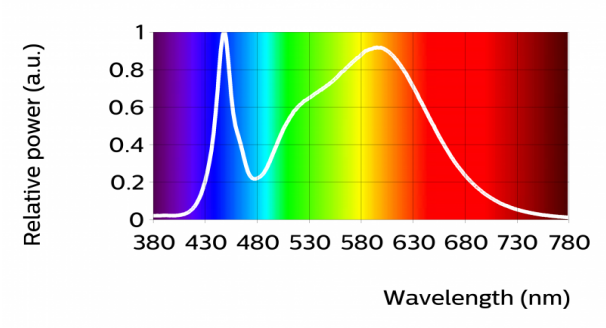

Electrical characteristics

Parameter	Min	Typ	Max	Unit
Forward voltage	38.7	40.7	42.7	V
Power consumption	45.0	47.4	49.7	W = kWh/1000h
Number of modules in series per chain			1	

Measurement precision for Vf +/- 3%. Measurement precision for power +/- 3.3%

Tuning information

Flux and efficacy versus current (at Tc nominal)

I [mA]	Flux [%]	Efficacy [%]
1280	109	98
1222	105	99
1164	100	100
931	81	104
582	52	110

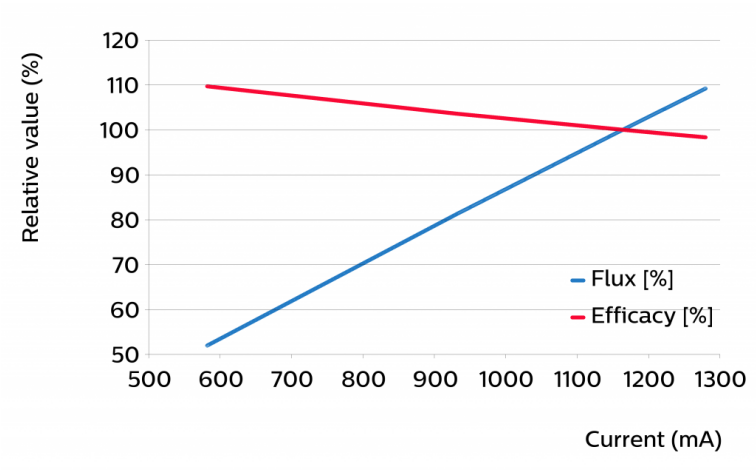

Flux and efficacy versus temperature at Tc (at I nominal)

Tc [°C]	Flux [%]	Efficacy [%]
80	95	96
45	100	100
25	102	102
0	105	103

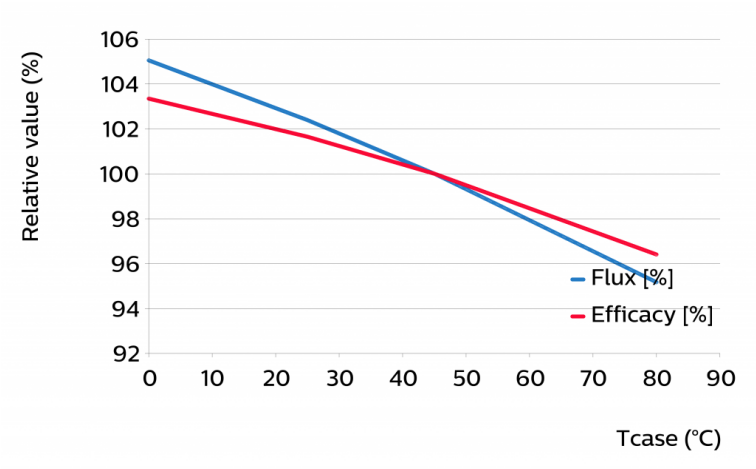

Lumen maintenance

Operation point	Lumen maintenance x 1000 hours	L70			L80			L90		
		B50	B20	B10	B50	B20	B10	B50	B20	B10
80% I nom 931 mA	Tc 25°C	>100	>100	>100	>100	>100	>100	62	61	61
	Tc nom 45°C	>100	>100	>100	>100	>100	87	49	48	48
	Tc life 80°C	>100	>100	>100	74	72	71	34	34	33
I nom 1164 mA	Tc 25°C	>100	>100	>100	>100	>100	>100	60	58	58
	Tc nom 45°C	>100	>100	>100	>100	99	98	47	46	46
	Tc life 80°C	>100	>100	>100	70	69	68	33	32	32
I life 1280 mA	Tc 25°C	>100	>100	>100	>100	>100	>100	58	57	57
	Tc nom 45°C	>100	>100	>100	99	97	96	46	45	45
	Tc life 80°C	>100	>100	>100	69	68	67	32	31	31

Performance Window

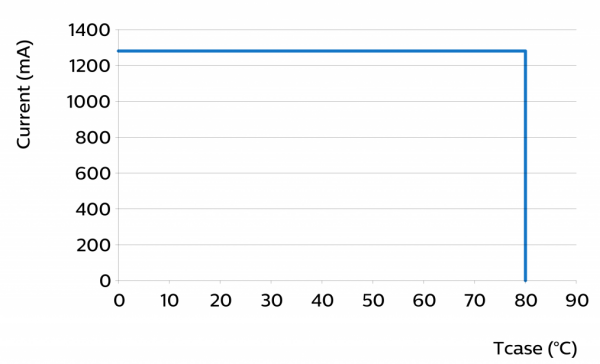

Wiring

Specification item	Value	Unit	Condition
Input wire cross-section	0.75...0.75	mm^2	BJB 47.303, solid wire, tinned wire
	18...18	AWG	BJB 47.303, solid wire, tinned wire
Input wire strip length	6...8	mm	

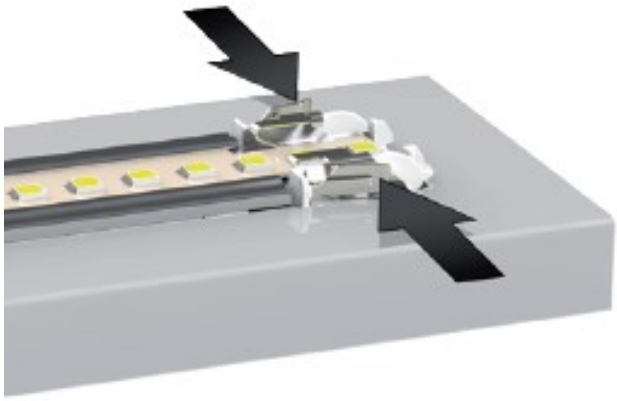

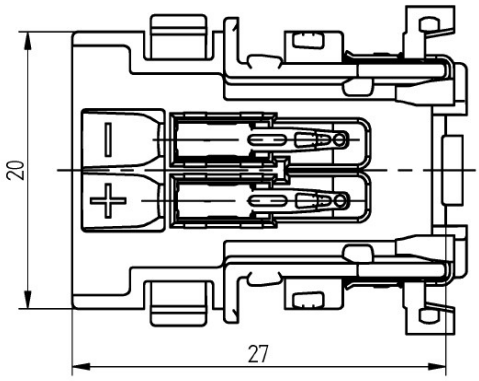

Mechanical characteristics

Parameter	Min	Typ	Max	Unit
Length	1117.4	1118.4	1119.4	mm
Width	19.8	20	20.2	mm
Height Total	2	2.3	2.6	mm
Product mass		83		gram

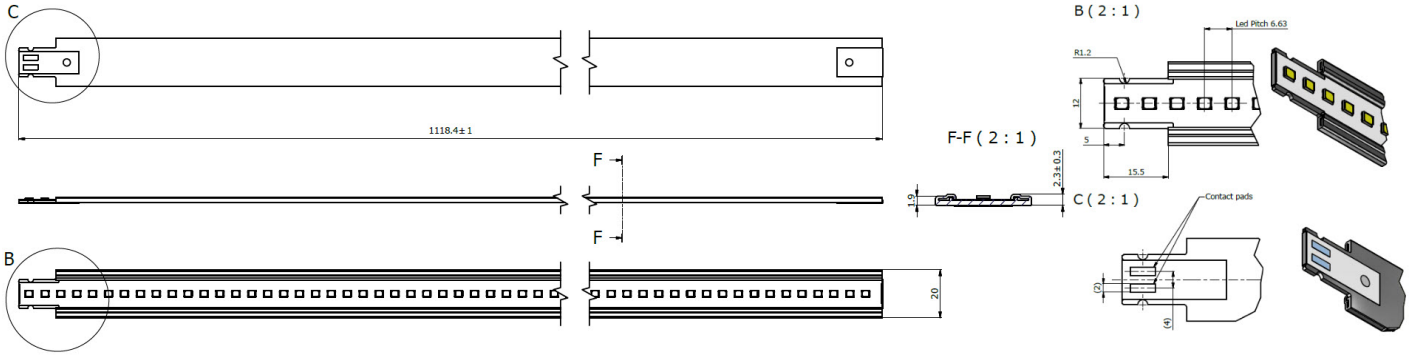

Absolute ratings

Parameter	Min	Max	Unit
Case temperature (Tc-max)		90	°C
ESD (direct contact)		8	kV
Working voltage		60	V_{dc}

Application information

Certificates and Standards
CE
ENEC
UL

Environmental
RoHS/REACH

Application	
Dimming	Yes

© 2019 Signify Holding. All rights reserved. This document may be subject to change. No representation or warranty as to the accuracy or completeness of the information included herein is given and any liability for any action in reliance thereon is disclaimed.
All trademarks are owned by Signify Holding or their respective owners.

Signify North America Corporation
10275 W. Higgins Road
Rosemont, IL 60018
Tel: 800-322-2086 Fax: 888-423-1882
Customer Service: 800-372-3331
OEM Support: 866-915-5886

Signify Canada Ltd.
281 Hillmount Road,
Markham, ONs Canada L6C 2S3
Telephone 800-668-9008

www.signify.com/advance